Nano-Speed PLZT Optical Switches

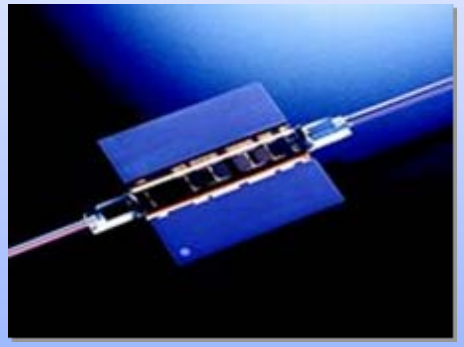

Keiichi Nashimoto

Nozomi Photonics Co., Ltd.

knashimoto@nozomiphotonics.com
www.nozomiphotonics.com

Outline

1. Switching Technologies
   - Switching Speed requirements
   - Switching Technologies
2. Nano-sec PLZT Waveguide Switch
   - Design Strategy
   - PLZT Switch
   - Applications
   - Roadmap
3. Summary

Nozomi Head Office in Japan

Nozomi Facility in US

Nozomi Clean Room in US

Optical Switching Speed Requirements

Circuit Switching (GMPLS)	Optical Burst Switching	Optical Packet Switching
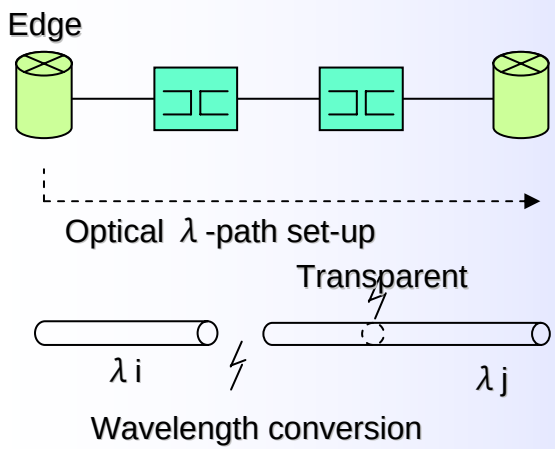	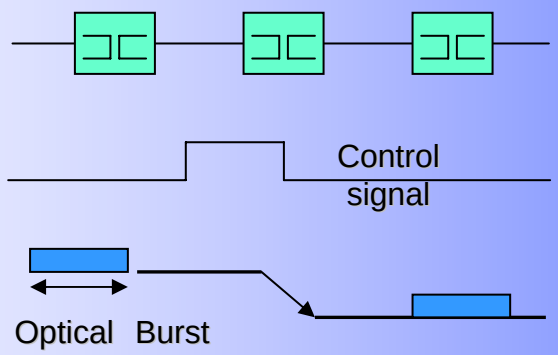	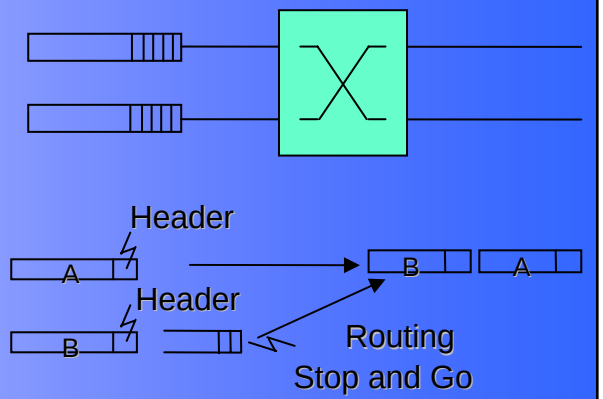
• Cut-through • Circuit Switch • **Switching Speed = ms**	• Outbound Signaling Control • High-speed & dynamic Circuit Switch • Buffer-less architecture • **Switching speed = ns~100ns**	• Stored-and-forward • Contention Control • Optical buffer is required • **Switching speed = ns ~10ns**

Source: Prof. Yamanaka, Kei Univ.

Optical Switch Technologies and Challenge

	Pros	Cons
MEMS	Scalability Small crosstalk	Slow response (~ 10 ms), High voltage (50~200 V)
Silica (PLC)	Low loss (< 0.1 dB/cm)	Slow response (> 1 ms), High power consumption
Polymer	Low loss (< 0.5 dB/cm)	Slow response (> 1 ms), Medium power consumption
MQW	Fast response (~ 100 ps)	High coupling loss, High waveguide loss
SOA	No loss Fast response (~ 1 ns)	High power consumption, PDL, Wavelength dependence, Noise
$LiNbO_3$	Fast response (~100 ns)	High voltage (~ 50 V), dc drift, Polarization dependence

Challenge => Fast, Low-power consumption, Low PDL, Low-loss

Motivation and Design Strategies

High-speed switching => EO effect, Low-voltage driving

+

Low-power consumption => Low-voltage driving

Low PDL => Isotropic EO effects, Low birefringence

Small size => Short electrode, High index (Small bends)

Scalability and Low cost => Waveguide devices

- ✓ **Efficient EO material => PLZT ($(Pb,La)(Zr,Ti)O_3$)**
- ✓ **Efficient waveguide structure => PLZT on Semiconductor**
- ✓ **Novel fabrication technology => SPE and Dry-Etching**

Material / PLZT ((Pb,La)(Zr,Ti)O_3)

✓ Reduction of drive voltage by large electro-optic coefficient materials

Effective Linear Electrooptic Coefficients

Material	r_c (pm/V)
$LiNbO_3$	17
$LiTaO_3$	22
$Ba_2NaNb_5O_{15}$	36
$Ba_2(K_{0.9}Na_{0.1})Nb_5O_{15}$	52
KD_2PO_4 *	52
PLZT (8/40/60)	102
PLZT (14/30/70)	112
$(Sr_{0.5}Ba_{0.5})Nb_2O_6$	210
PLZT (7/62/38)	443
PLZT (8/65/35) (10 μ m)	523
PLZT (8/65/35) (3 μ m)	612
$(Sr_{0.75}Ba_{0.25})Nb_2O_6$	1400

$r_c=(n_3^3/n_1^3)\cdot r_{33}-r_{13}$ @ λ =633 nm, $^*r_c=2r_{63}$ @ λ =546 nm

Source: G. H. Haertling and C. E. Land, J. Am. Ceram. Soc., 54 (1971) 1.

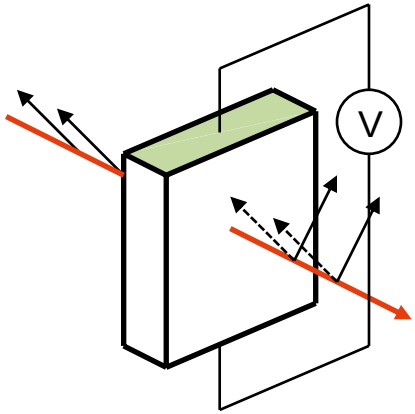

EO Effect

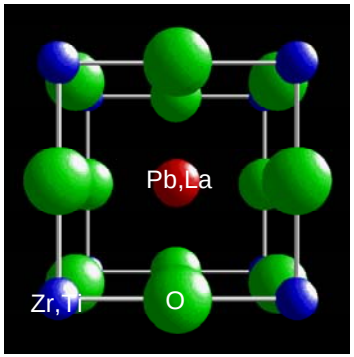

Structure / PLZT on Semiconductor

- ✓ Reduction of driving voltage and device size by efficient EO-PLZT waveguide on semiconductor structure

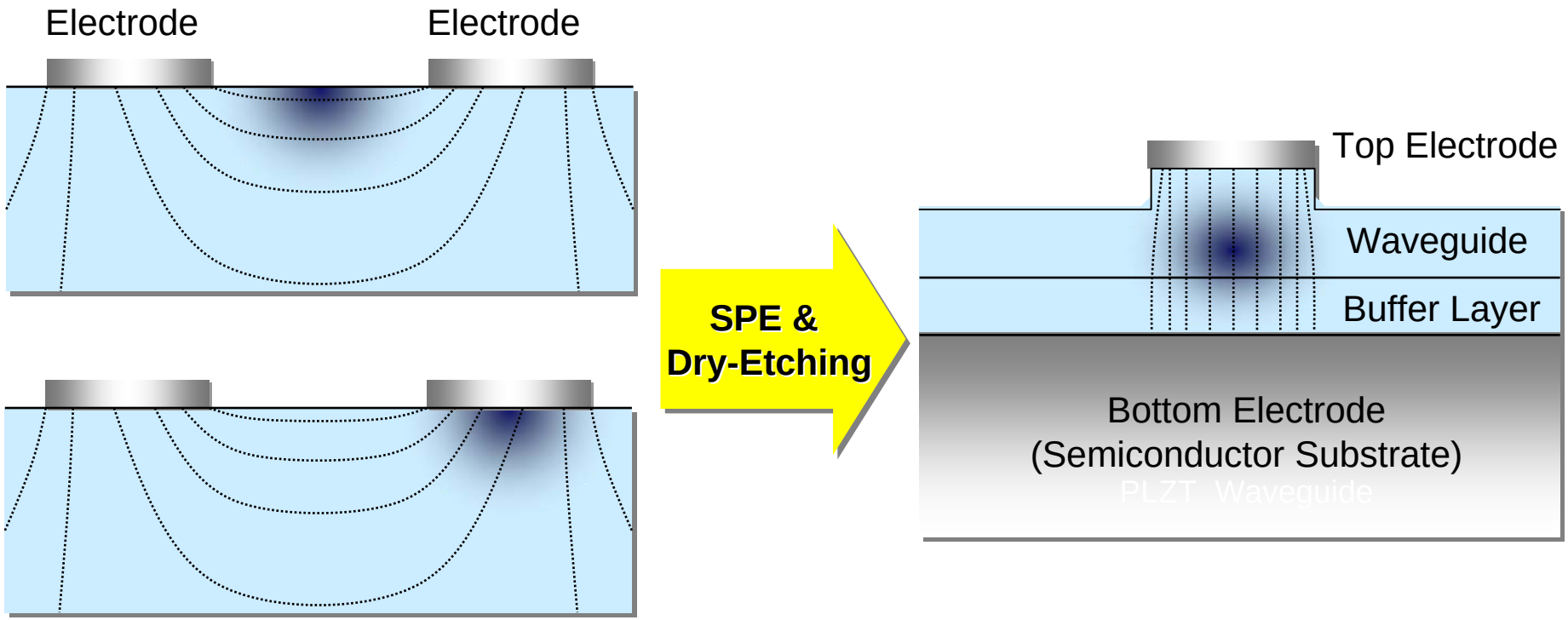

Conventional EO Switch

PLZT on Semiconductor

Fabrication / SPE and Dry Etching of PLZT

- ✓ Single-crystal PLZT with extremely smooth surface can be grown by SPE.
- ✓ Rib waveguide with smooth side wall can be formed by dry etching.

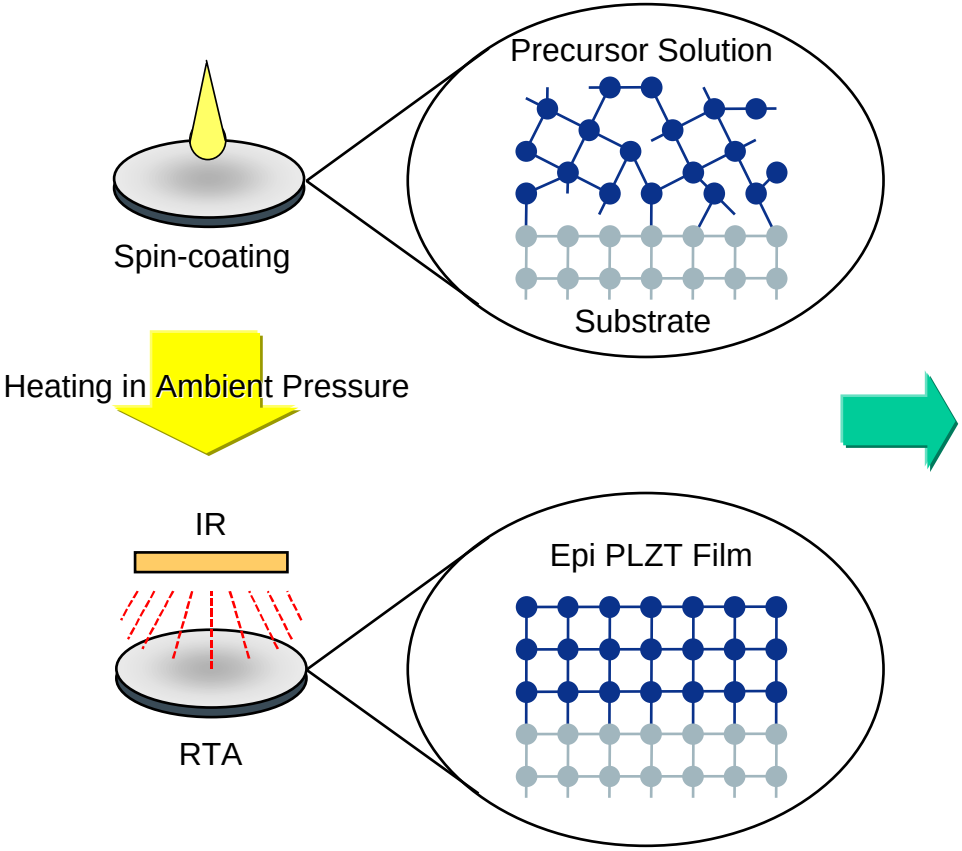

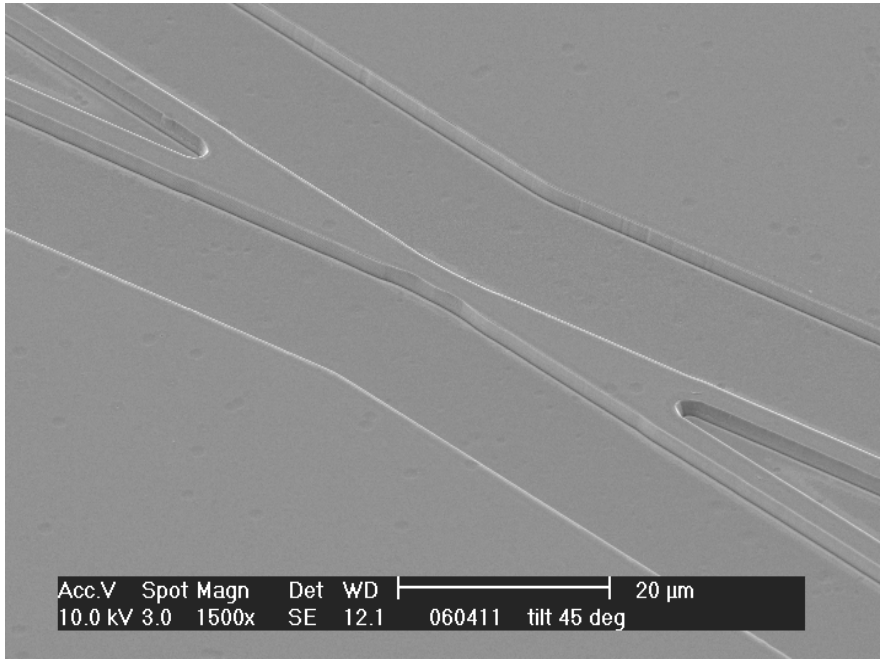

Solid-Phase Epitaxy (SPE)

Dry etching

Structure of PLZT Switch

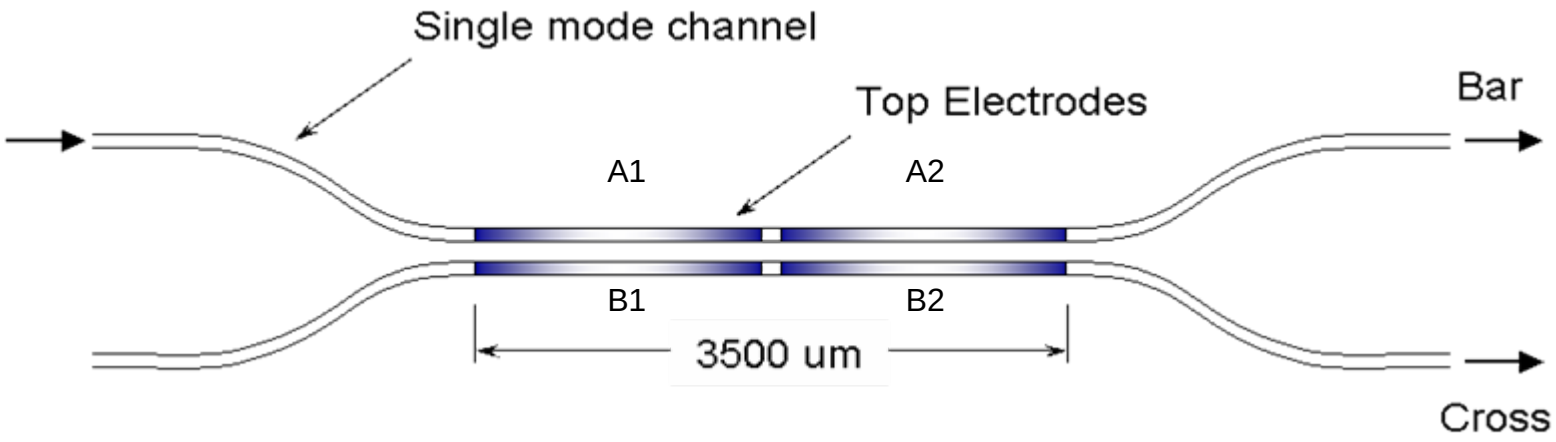

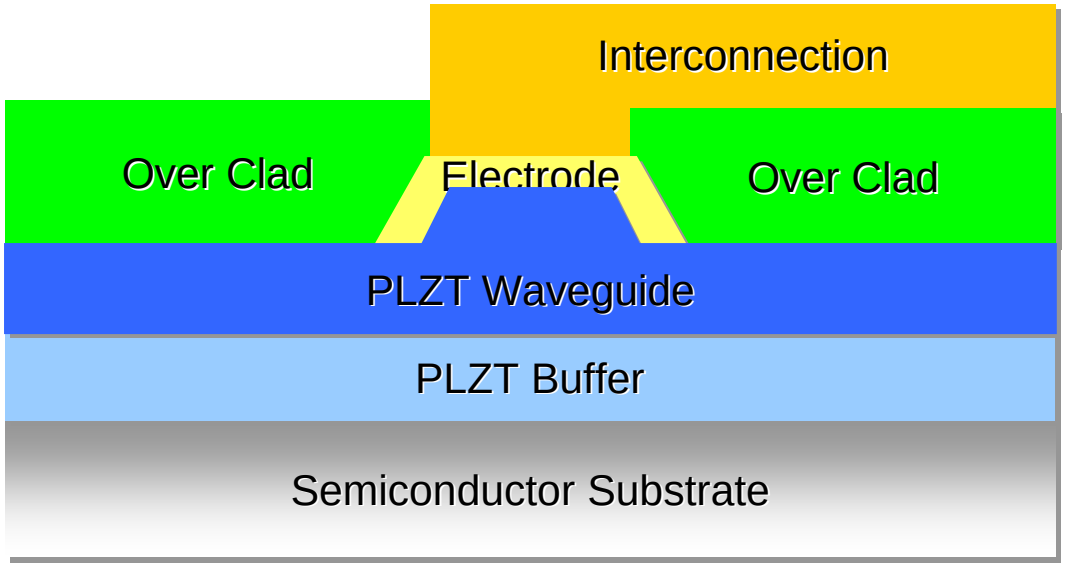

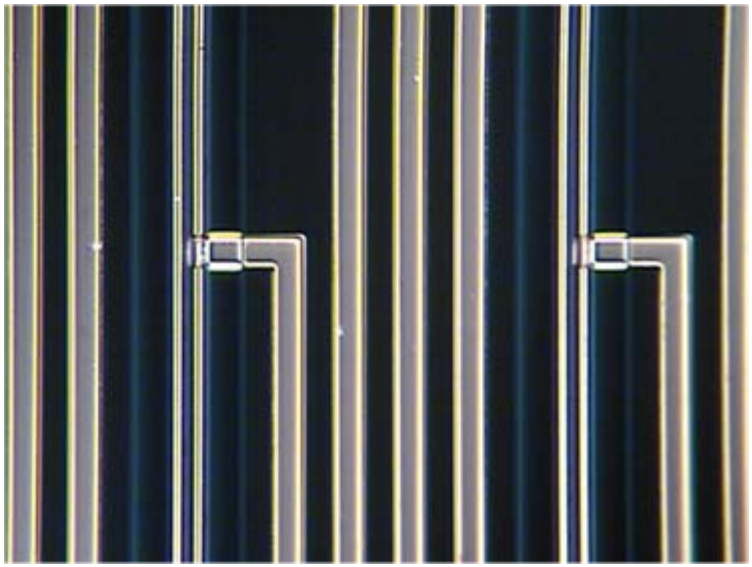

PLZT Switch Chip and Subsystem

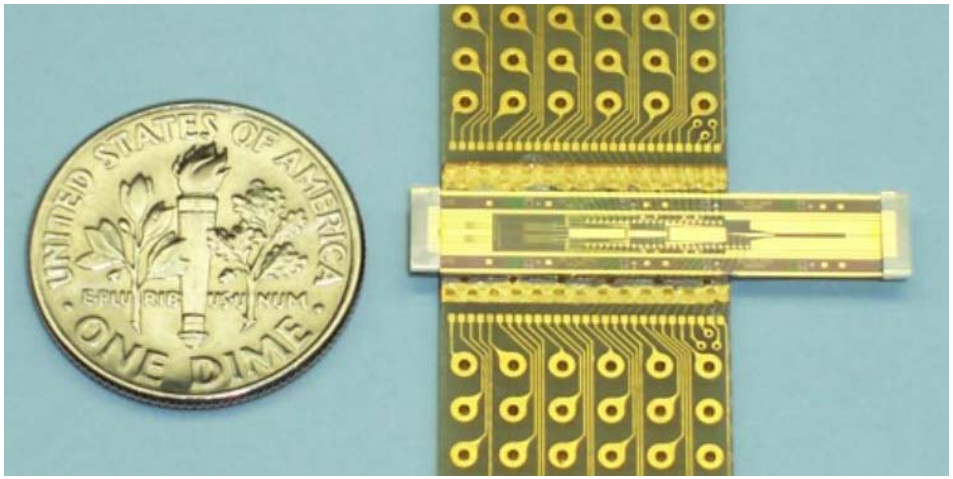

1x16 Switch Chip

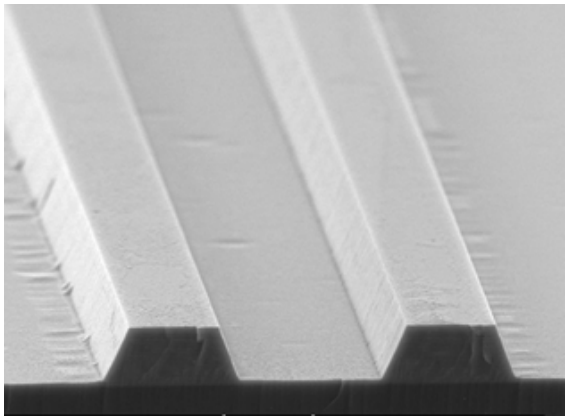

PLZT Waveguide

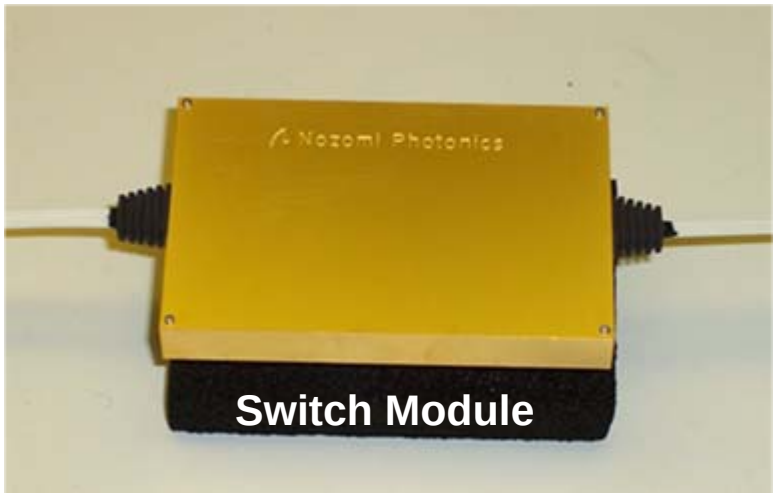

Switch Module

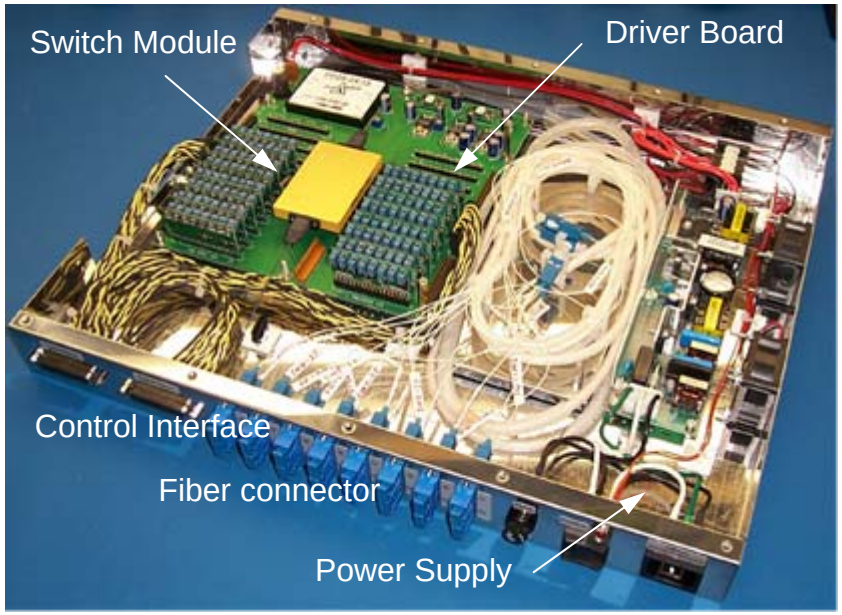

Switch Subsystem

Switching Response of PLZT Switch

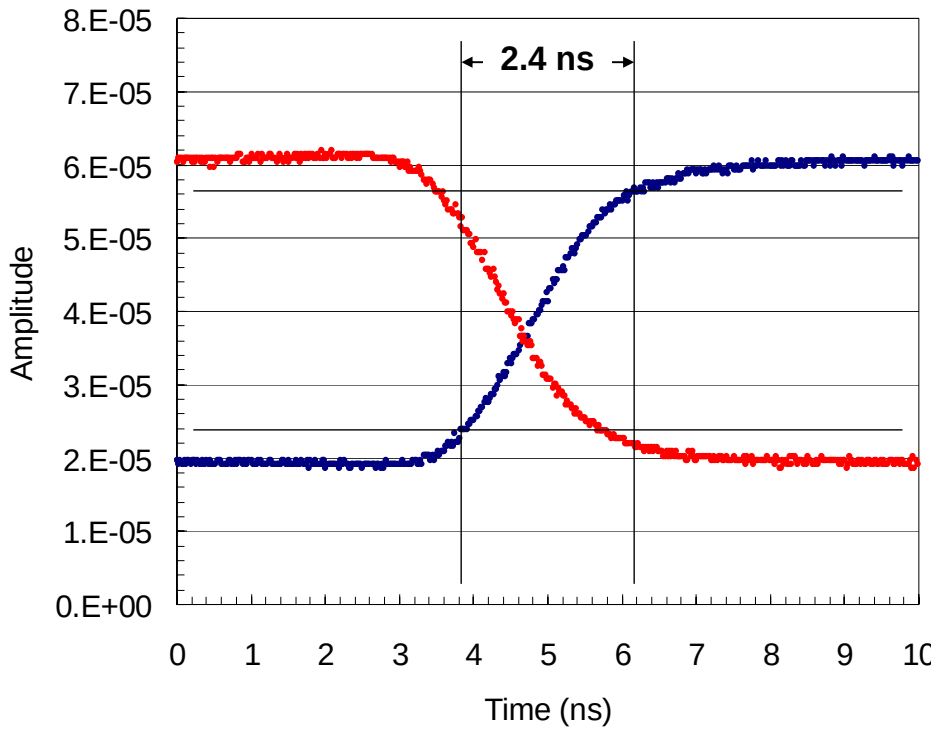

1x2 Switch Response

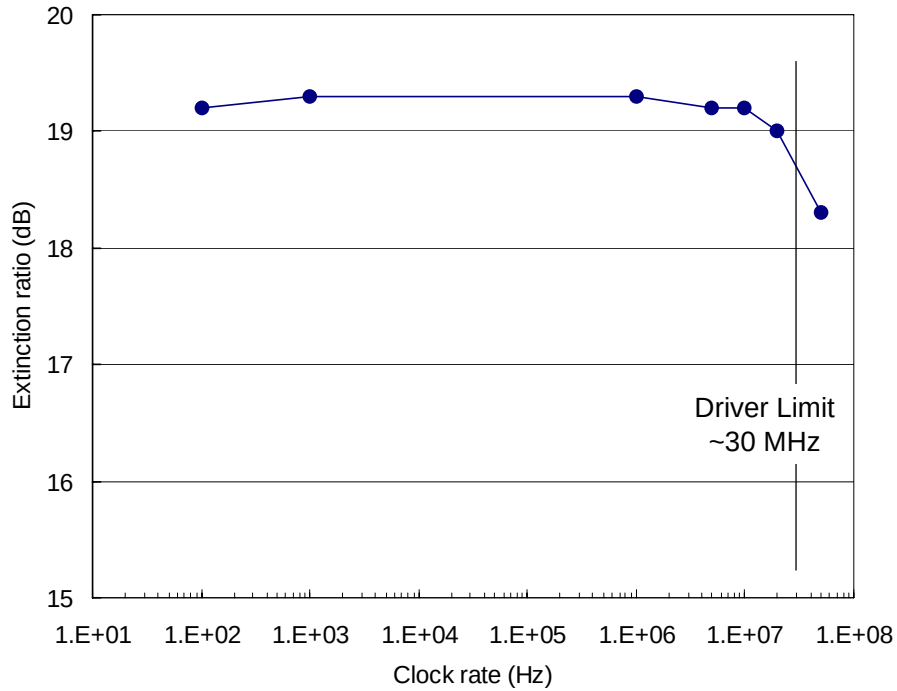

1x2 Switch Extinction Ratio

Power Consumption of PLZT Switches

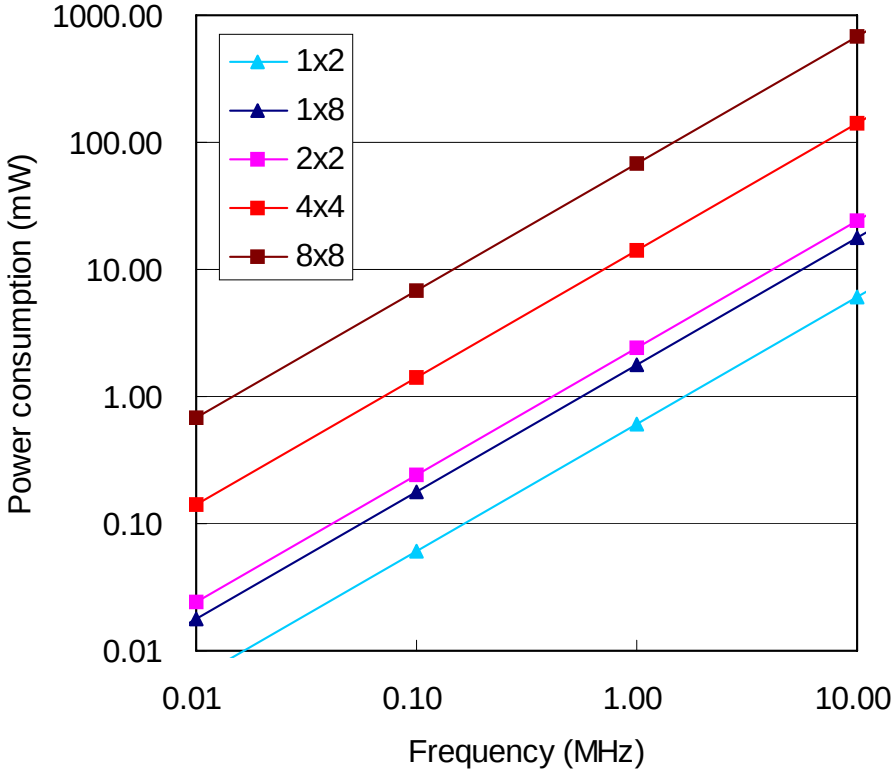

PLZT Chips
(calculated)

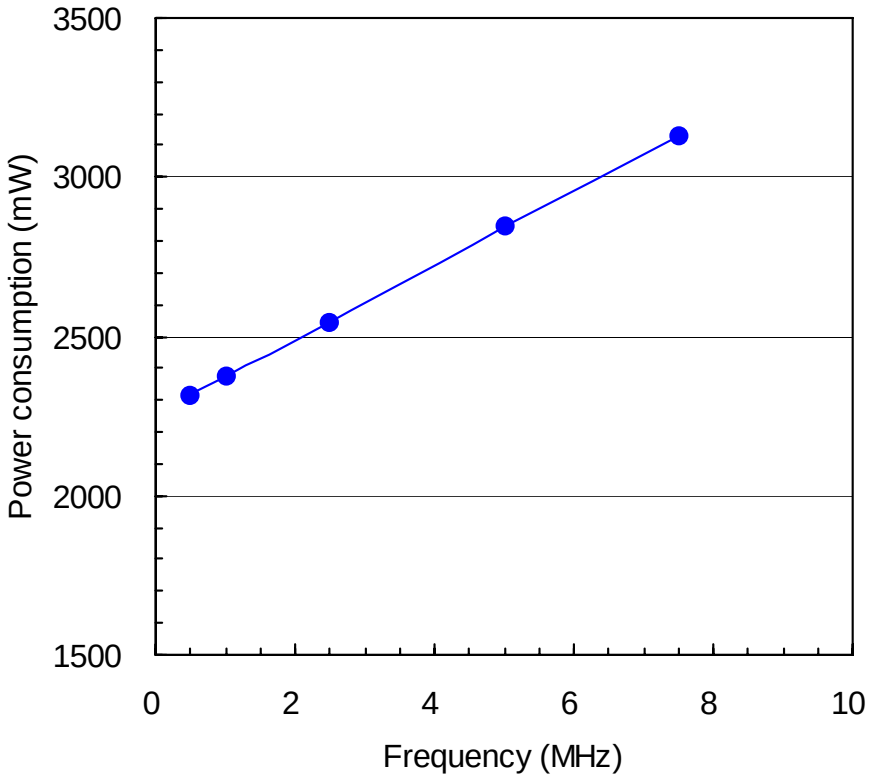

1x8 Driver Electronics
(measured)

Optical Switch Technologies

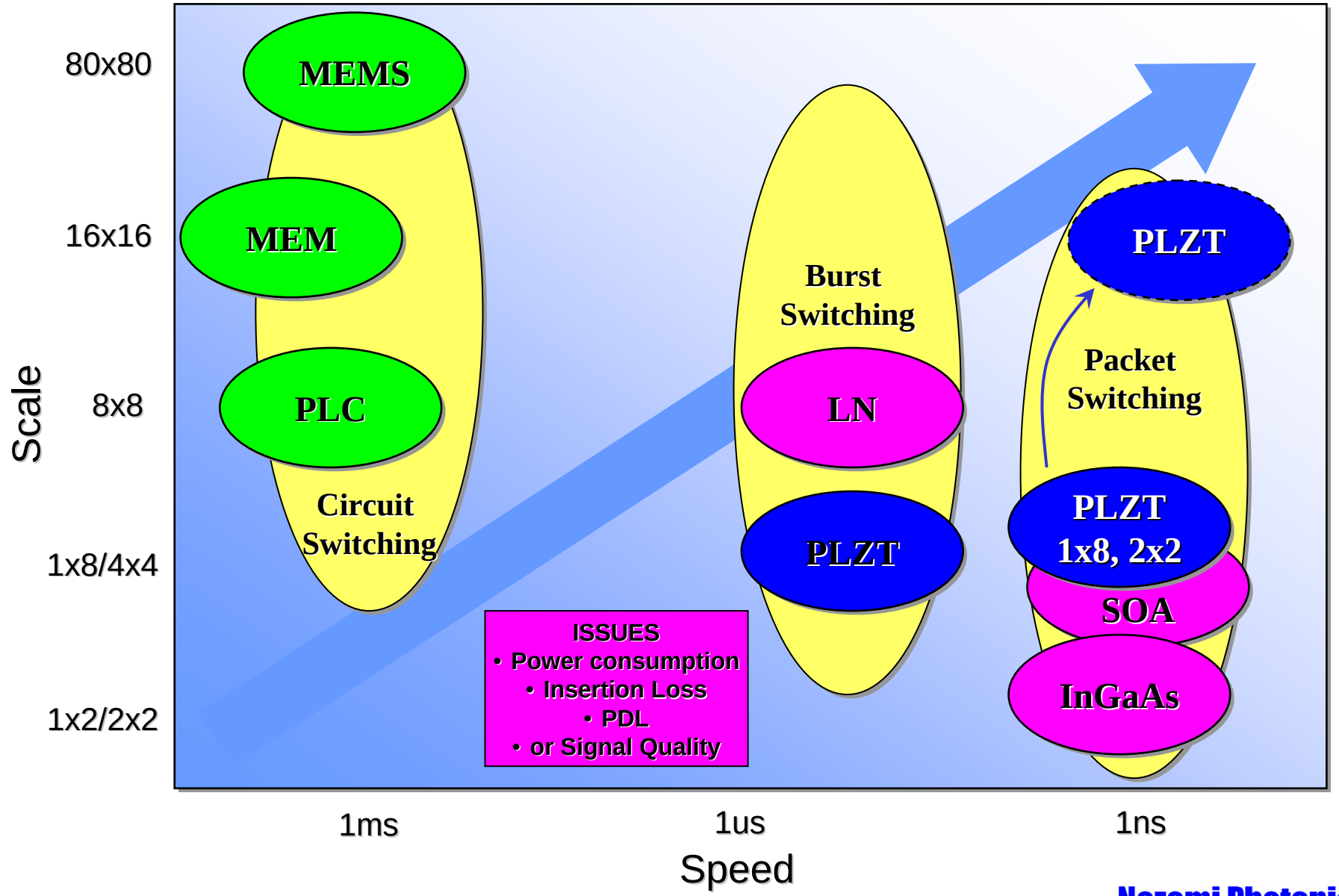

Nozomi Photonics

NGN Applications of Nano-Speed PLZT Switches

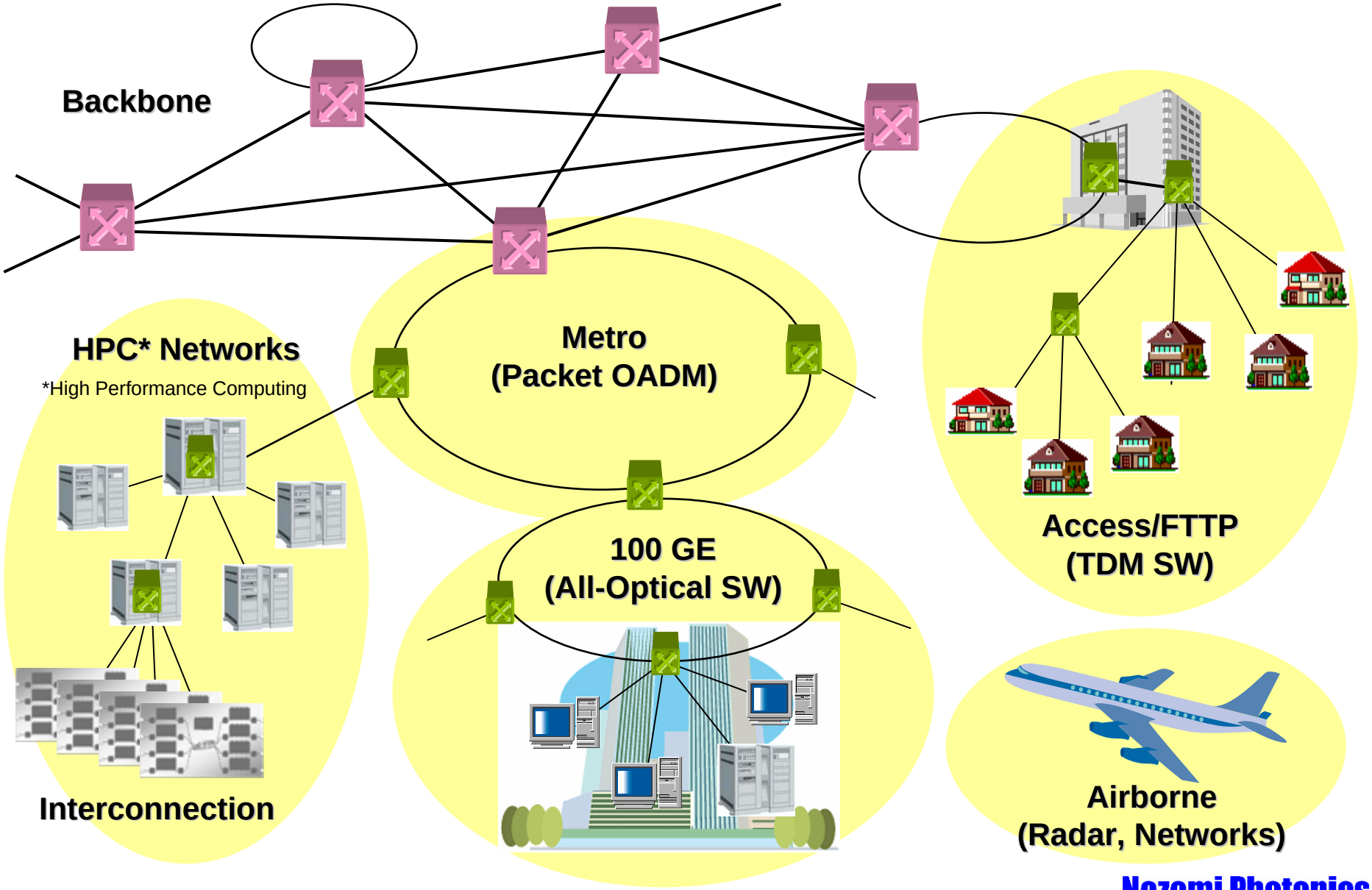

Nozomi Photonics

Papers on PLZT Switch at OFC 06

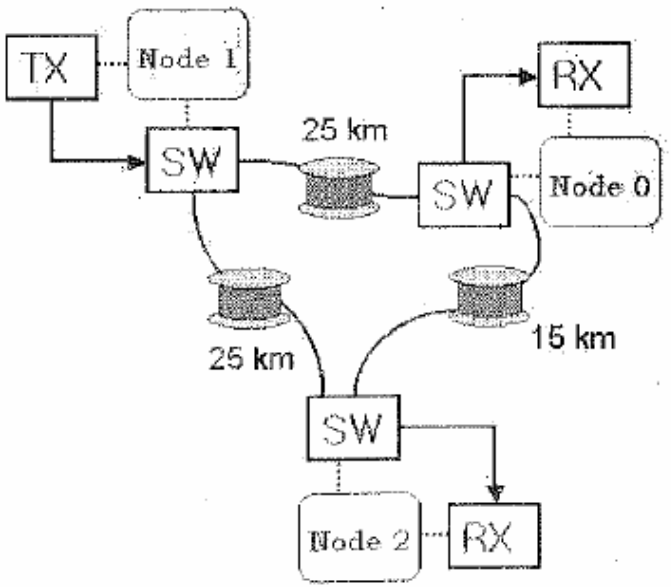

Figure 2. Testbed configuration

Stanford & Fujitsu: J. Kim et al, OFC2006, PDP43.

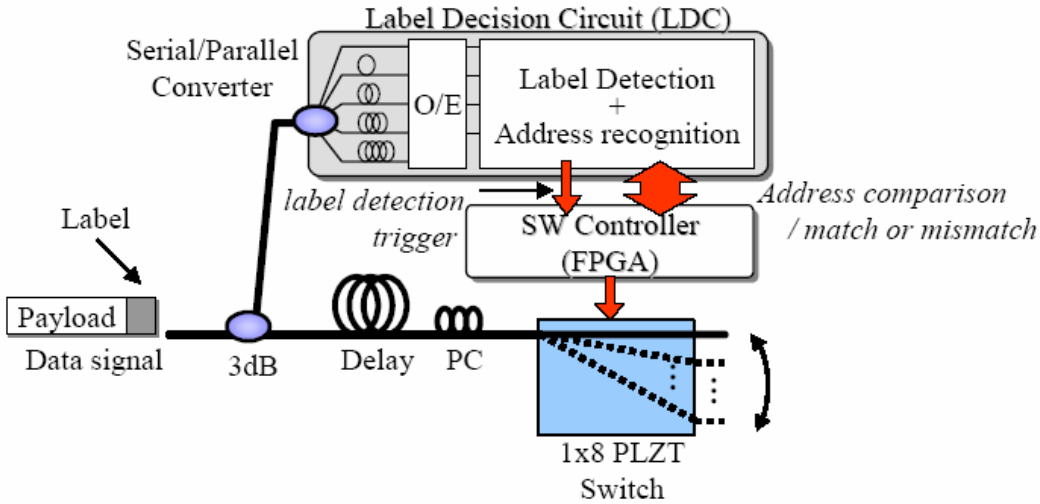

KDDI Labs: R. Inohara et al, OFC2006, OWP7.

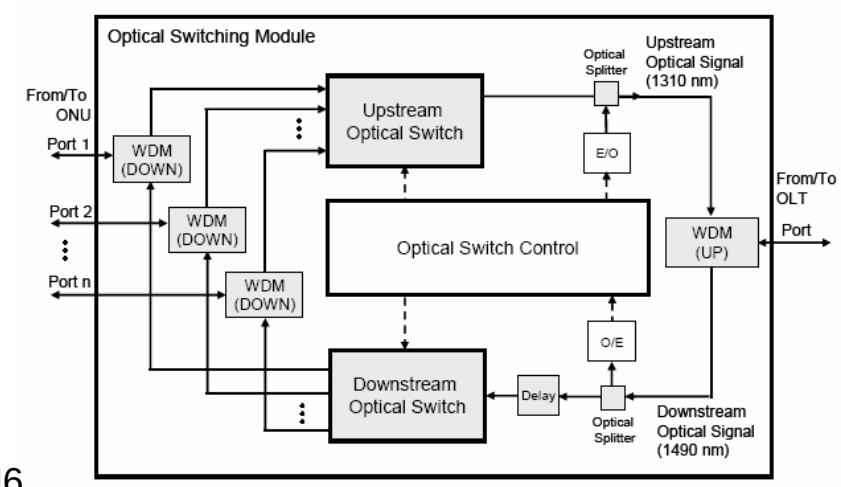

Fig. 3. Basic functional block of OSM

NEC COS: T. Nomura et al, OFC2006, OTuJ6.

Keio Univ. & Nozomi Demo at iPOP on 6/22-23, 06

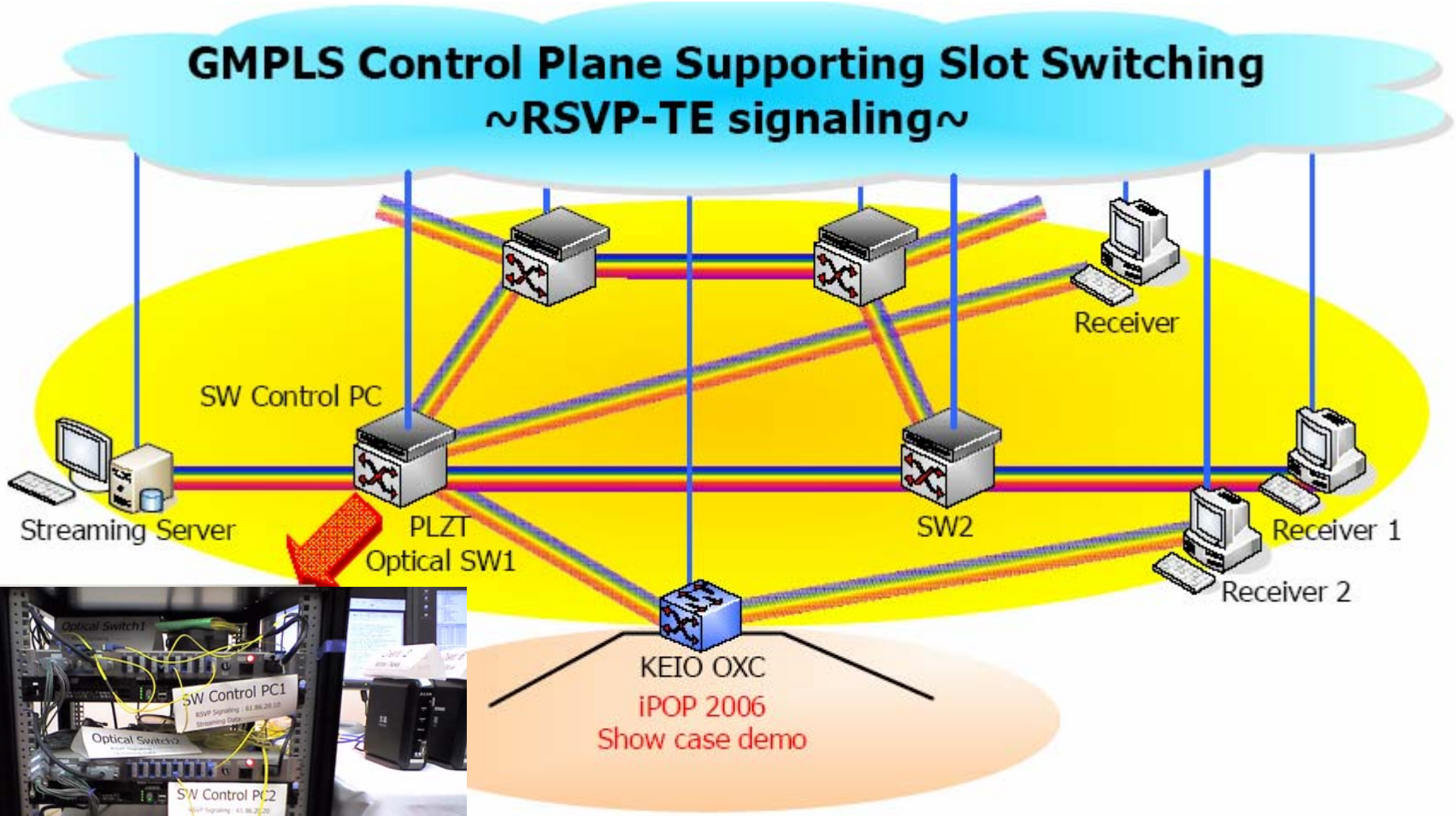

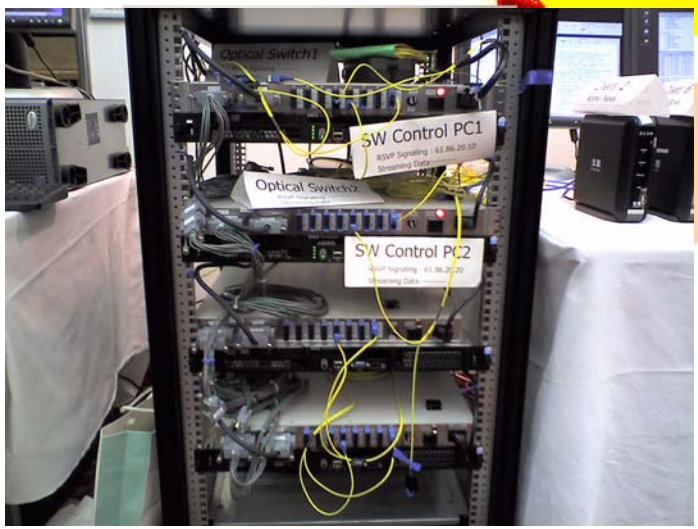

※RSVP-TE:Reservation Protocol-Traffic Engineering

Conceptual One-Chip ROADM

- Small size: All 40ch-ROADM functions (AWG, Switch, VOA, EDWA, Tap) will be integrated on a single small PLZT waveguide chip which fit into a pizza box system.
- Low Cost: Drastic cost reduction enabled by the monolithic integration.
- Low Power: Minimal power consumption enabled by low-voltage driving.
- Fast Speed: 5 ns-response enables packet switching and burst switching as well as circuit switching.

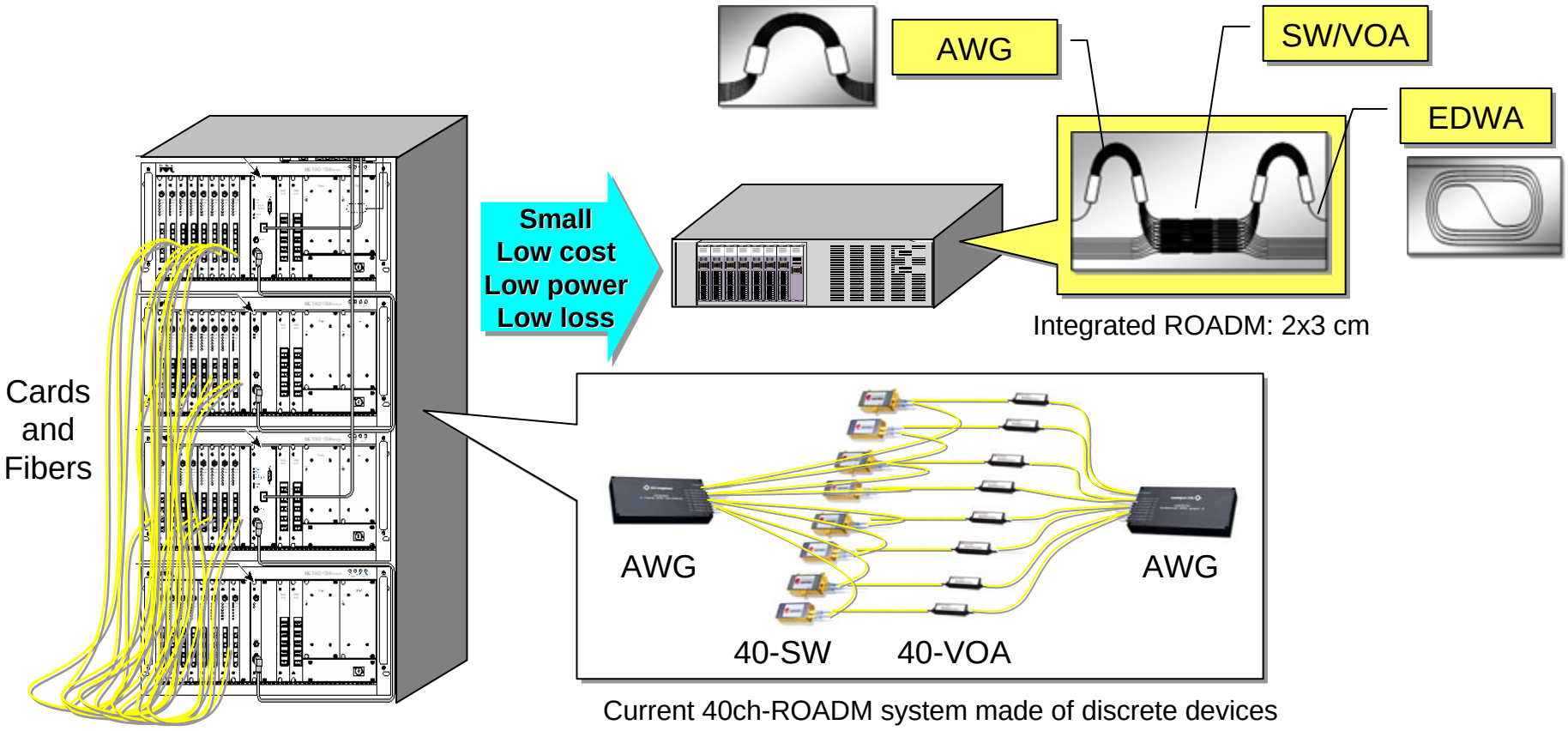

Current 40ch-ROADM system made of discrete devices

Roadmap / PLZT Devices and Related Services

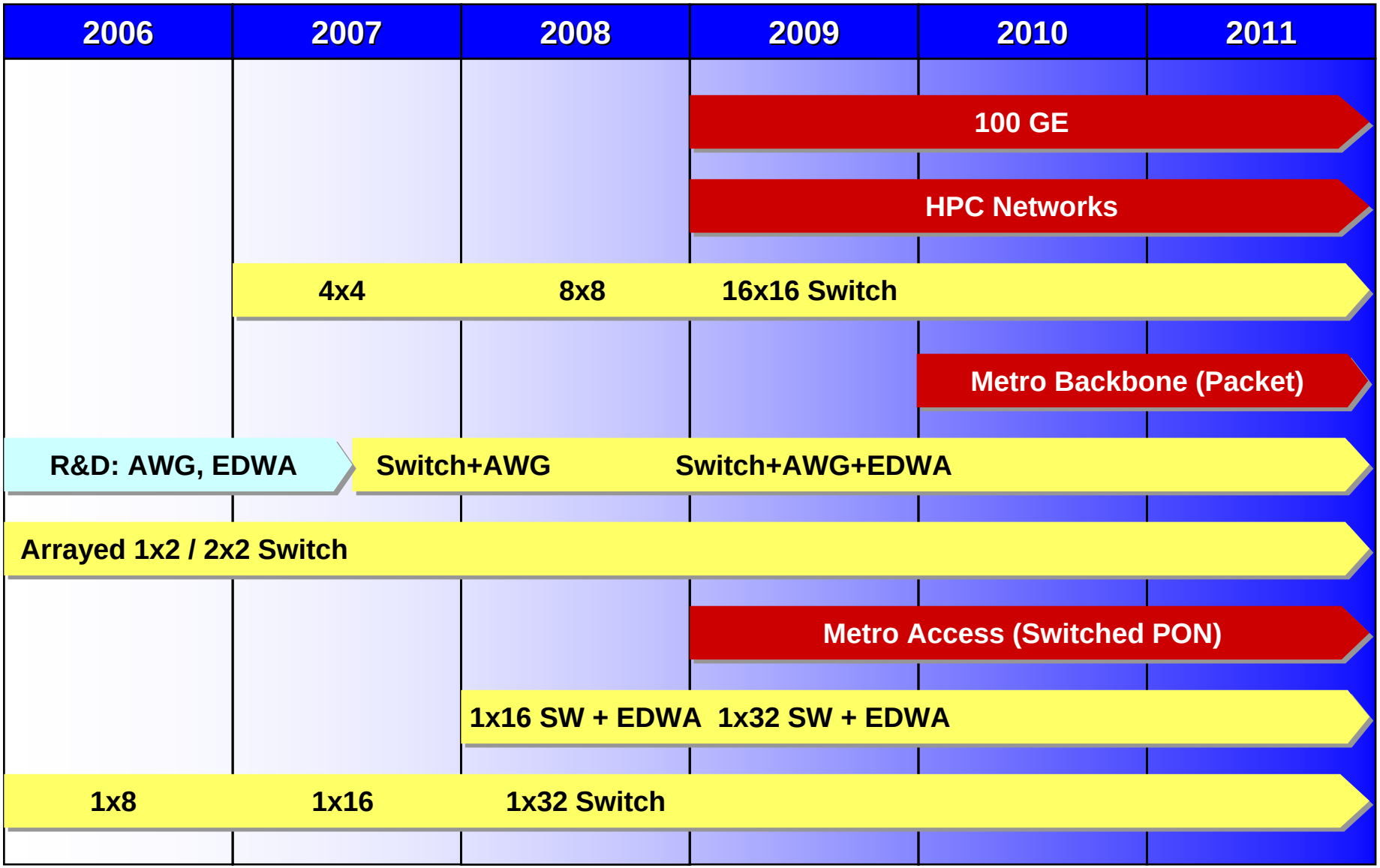

Summary

- A SPE-Grown PLZT waveguide on semiconductor substrate device can create efficient voltage-induced index change and has high refractive index suitable for a high-speed, low-power consumption, and miniaturized optical switches and integrated devices.
- PLZT switches with 1x8 and 4 arrayed 2x2 ports are available and less than 6 ns switching speed and polarization independent switching (PDL < 0.5 dB) are capable with the PLZT switches.
- The PLZT optical switch which can be one of key elements for next generation networks based on burst switching and packet switching systems including grid, switched access networks, 100G LAN, Interconnections, and phased array antenna.

Thank you for your attention!

Nozomi Photonics

For more information: Ken Nashimoto
knashimoto@nozomiphotonics.com
www.nozomiphotonics.com