GENI Backbone Node Hardware Architecture

D. Blumenthal (USCB), N. McKeown (Stanford)

Planned Deployment: NLR Example

We assume that there are approximately 20 GENI Backbone Nodes in North America, interconnected by optical fiber carrying multiple wavelengths, each operating at 10Gb/s.

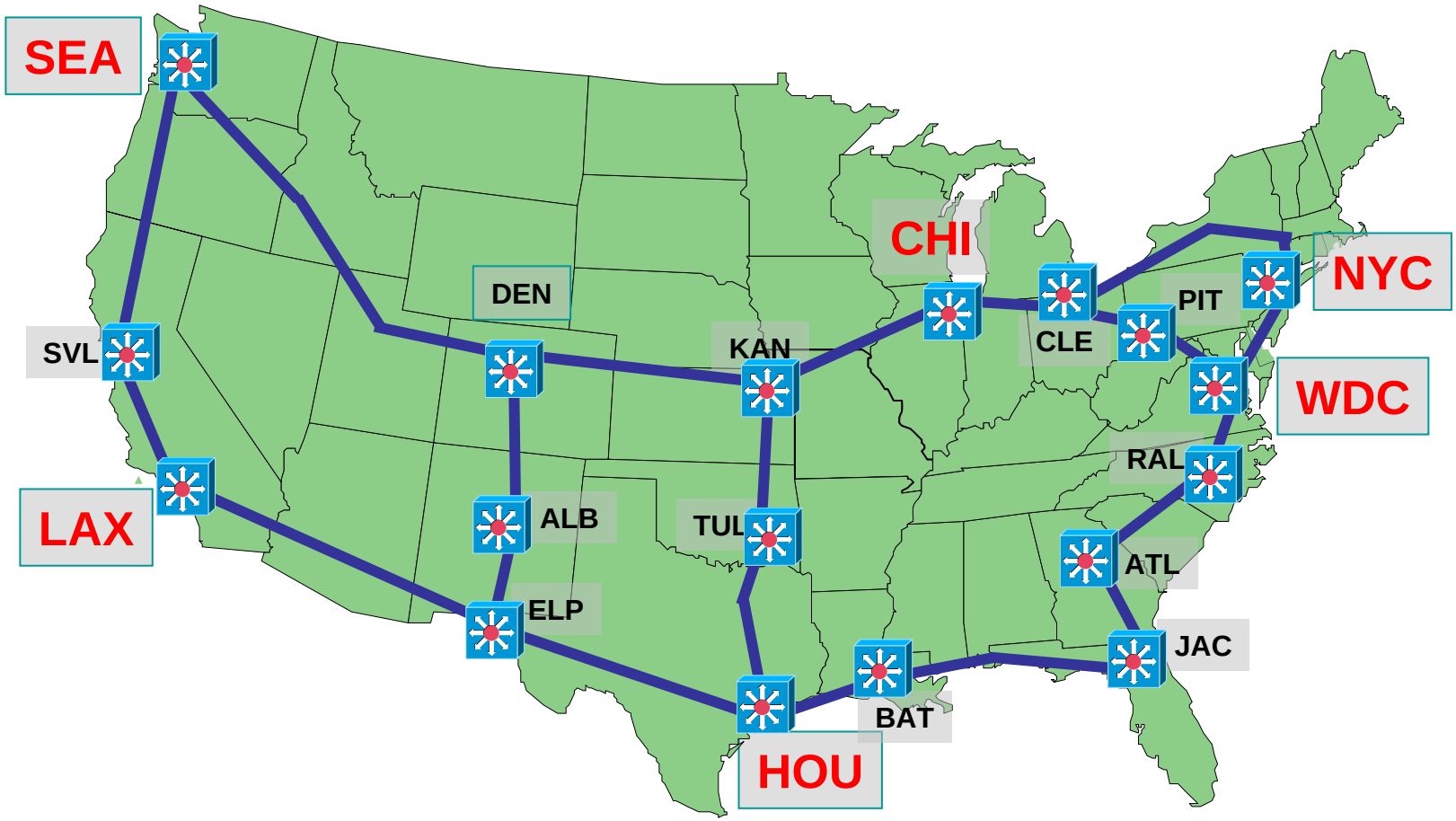

Backbone Substrate Model

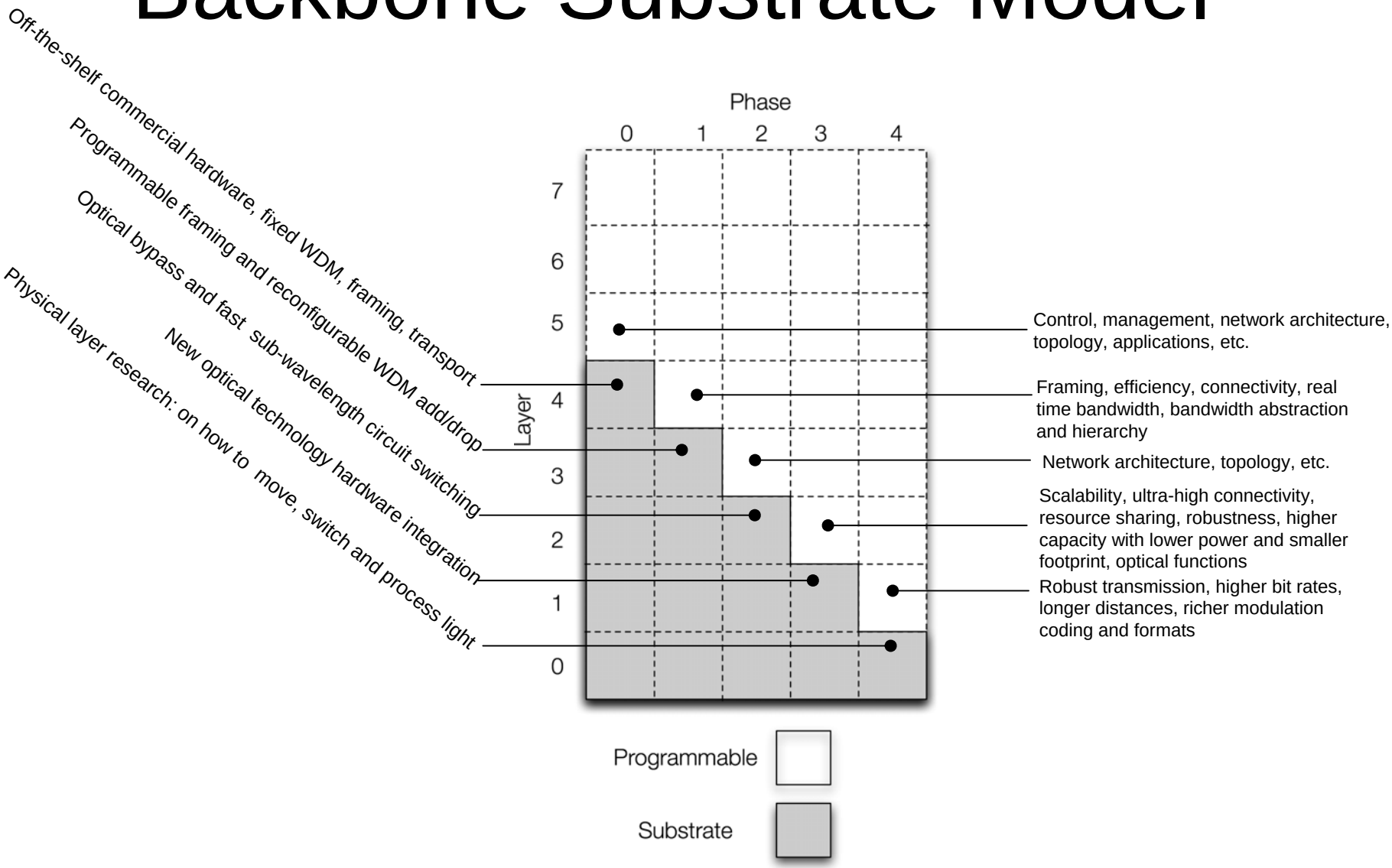

Functional Building Blocks

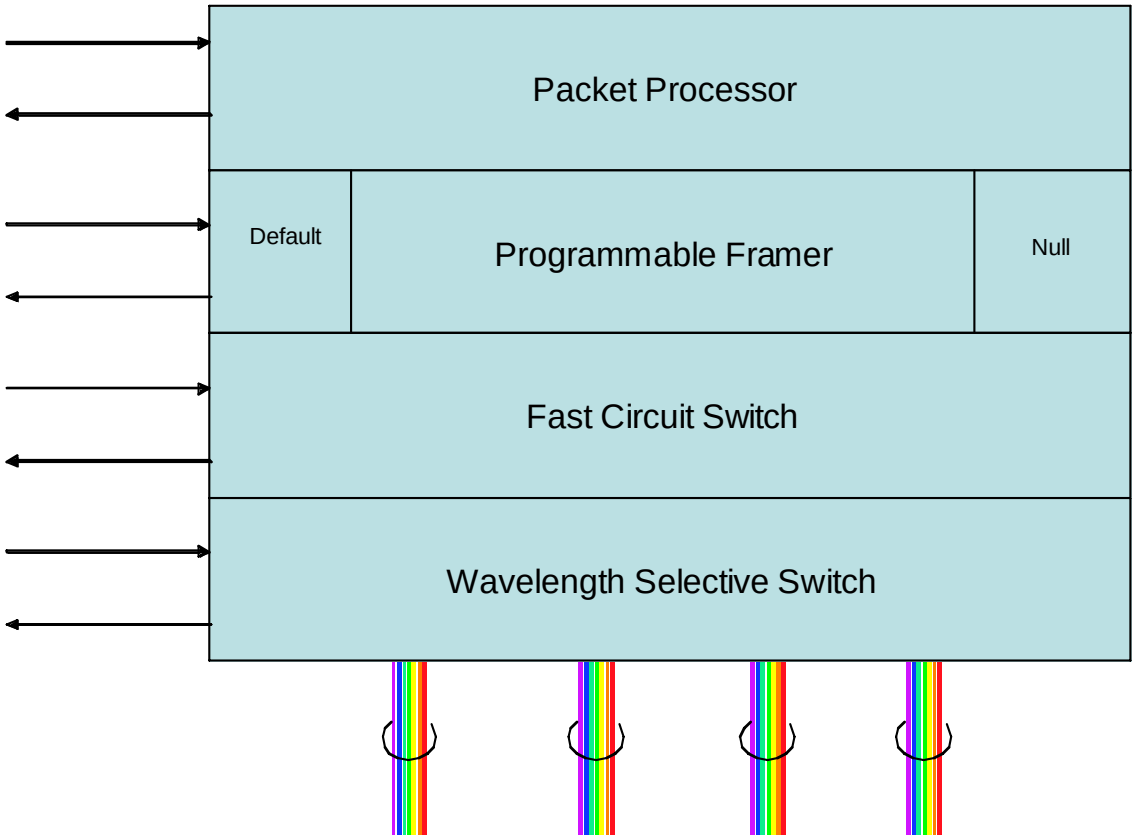

Functional Building Blocks

- **Wavelength Selective Switch (WSS)**: Data on one 10Gb/s wavelength can be switched to another wavelength, or delivered to the Fast Circuit Switch. Data carried on a wavelength is not interpreted in any way by the WSS.
- **Fast Circuit Switch (FCS)**: Circuits are time-division-multiplexed onto a 10Gb/s wavelength. The minimum granularity will be 1Mb/s, and the circuit switch should be capable of establishing a new circuit in less than 1ms.
- **Programmable Framer (PF):** The framer will frame packets inside circuits. SONET is one obvious choice for a default framing format. The framer should have a null framing format in cases where the packets themselves carry sufficient information for recovery at the destination.
- **Packet Processor (PP)**: This is what we've been calling the Programmable Router. We propose changing the name to Packet Processor as it can really process packets in any way it chooses, at layers higher than we traditionally think of as routing. E.g. it could transcode packets from one format to another, or do deep application level packet inspection, or even terminate flows as an end-point.

Proposed GENI Backbone Node Architecture

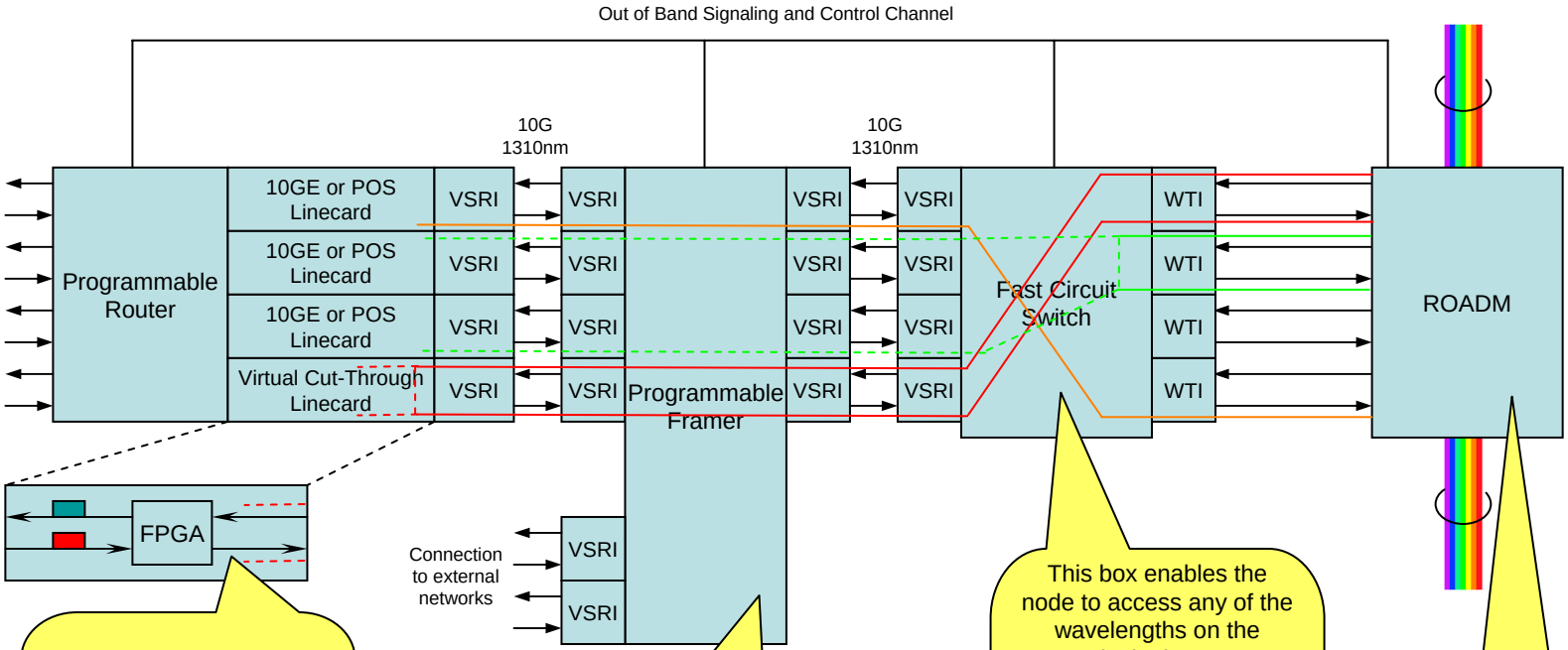

This linecard serves as a single channel (lambda) TDM switch that can cut through or add/drop sub-wavelength bandwidth without going into the router.

This box enables programming of different framing and transport protocols. It can be controlled by the router or a local or external network user. It is used to bridge protocols from external networks. The router or external network can also program a bypass state that makes this box transparent.

This box enables the node to access any of the wavelengths on the network via the ROADM and the Wavelength Tunable Interfaces (WTIs). The fast crossconnect also serves to profice cut-through to wavelengths that are add/dropped from the ROADM. It can also pass through wavelengths intact to the router.

This box enables there to be more bandwidth on the network (e.g. lambdas, fibers) than in the node, allowing GENI to scale to a larger number of nodes and not require the electronics to match the total number of wavelengths or capacity of the network.

VSRI = Very Short Reach Interface
WTI = Wavelength Tunable Interface
- - - - - = TDM switched channel

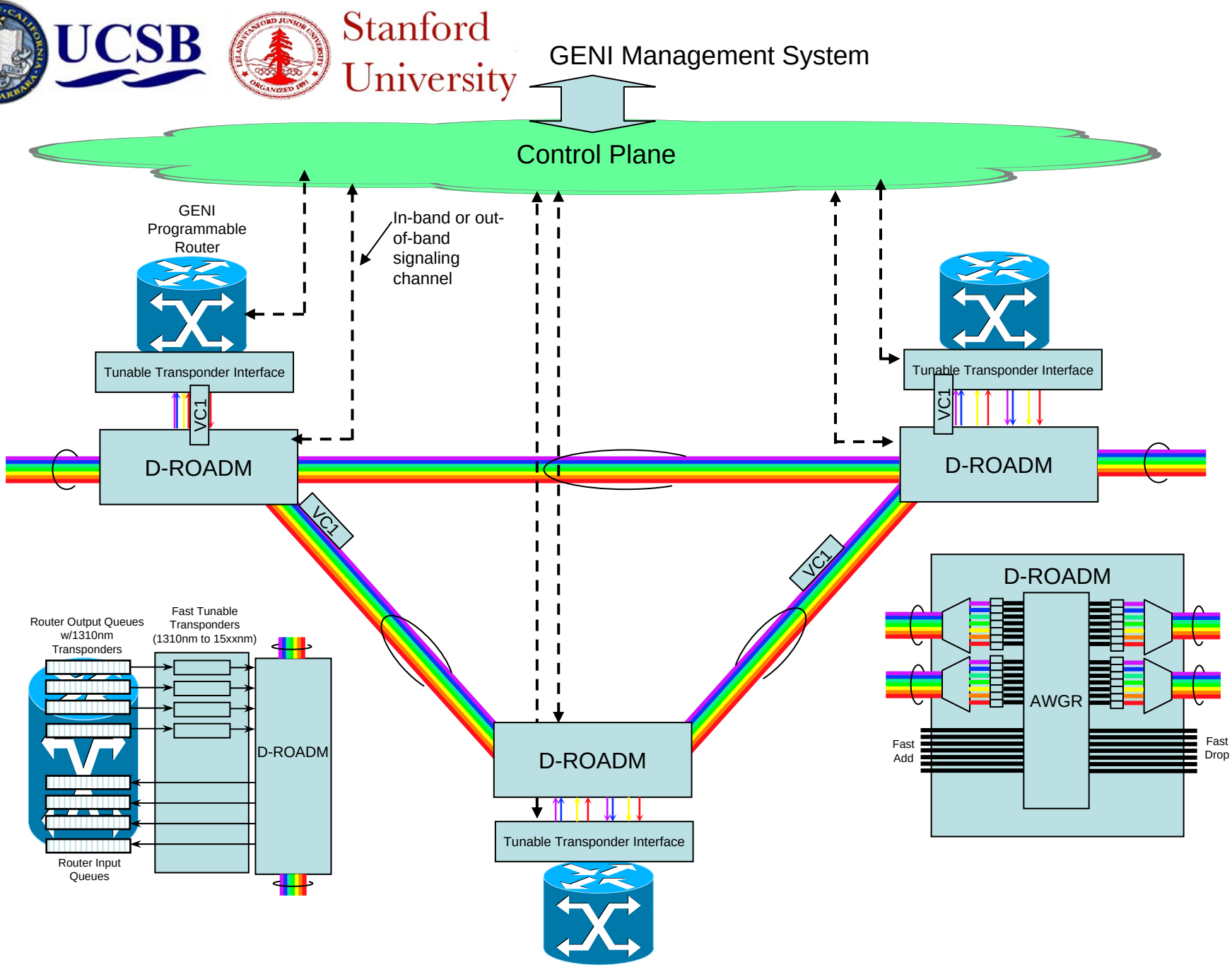
UCSB
Stanford University
GENI Management System
Control Plane
GENI Programmable Router
In-band or out-of-band signaling channel
Tunable Transponder Interface
VC1
D-ROADM
Tunable Transponder Interface
VC1
D-ROADM
VC1
VC1
D-ROADM
AWGR
Fast Add
Fast Drop
Router Output Queues w/1310nm Transponders
Fast Tunable Transponders (1310nm to 15xxnm)
D-ROADM
Router Input Queues
D-ROADM
Tunable Transponder Interface